Part

## 可靠性试验

Reliability Test Items And Conditions

| Class | Test item | Testing environment |
|---|---|---|

# 包装（1）

## Packaging (1)

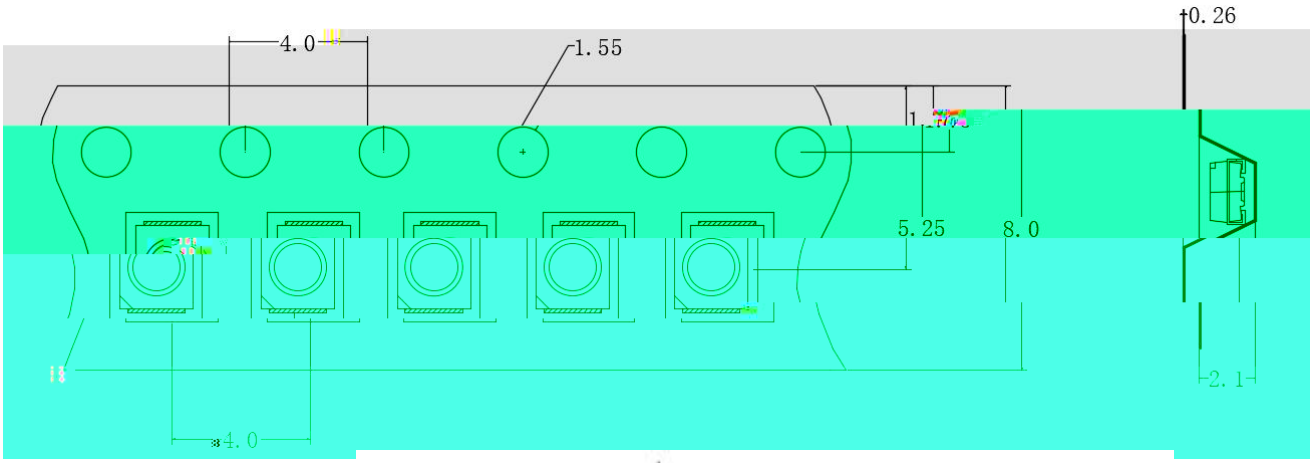


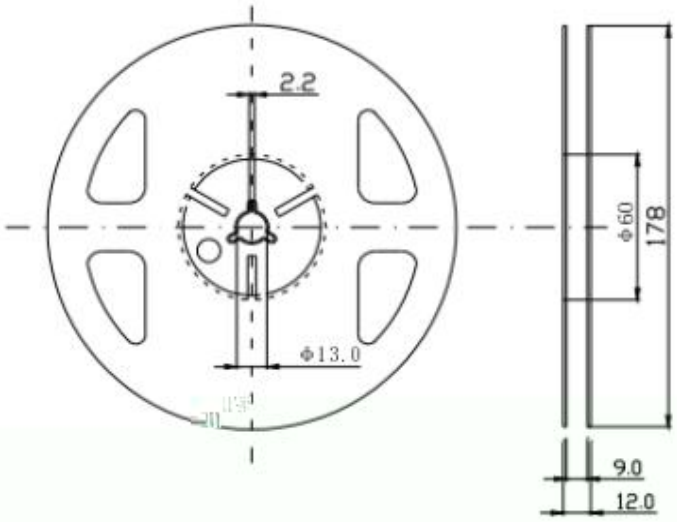


:

1. ㄚ β ㄐ (mm) Â
1. Size unit is mm (mm).
2. `E ±0.1mm Â
2. The dimensional tolerance is ± 0.1mm.

## 圆盘及载带卷出方向及空穴规格 Disk and carrier belt direction of roll and hole dimensions