技术数据表

[redacted] ）：

* L/W/H :3.2*2.7*1.0 mm

Outline Dimensions (L / w / h): 3.2x 2.7 x 1.0mm

* : /

Luminous color and colloid: infrared receiver tube /transparent colloid

* ROHS

Environmental protection products Complied With ROHS Directive

* MSL : 3

Moisture sensitivity level MSL : 3 levels

* EIA n i

EIA standard

A^ Ŧ ш y

电性参数

Power consumption	Pd	150	mW
Reverse Voltage	VR	32	V

Op

外形尺寸

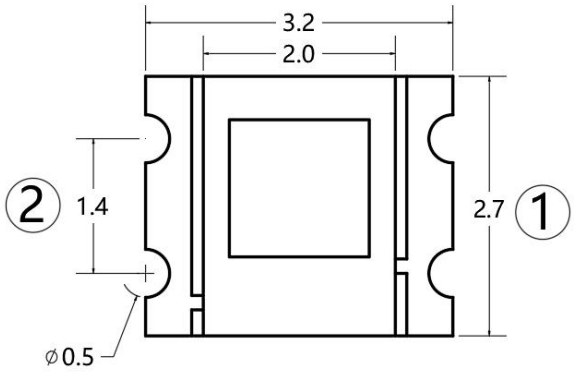

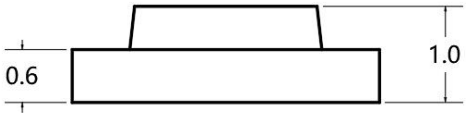

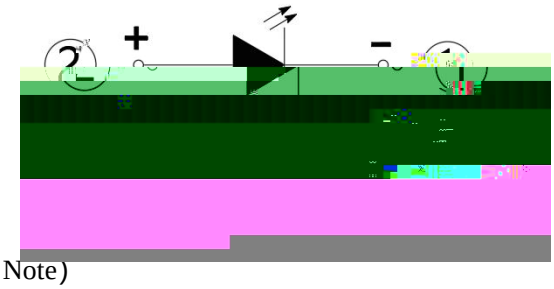

(Note)

1.

Dimensions are in millimeters

2. ± 0.30mm

Tolerances unless mentioned are ± 0.30mm

包装（ ）

载带与圆盘尺寸

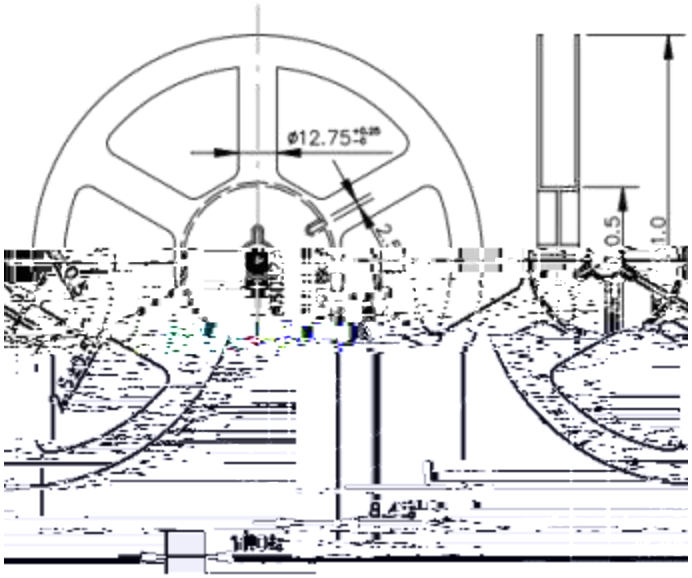

包装（ ）

Moisture Proof and Antti-Electrostic Foil Bag

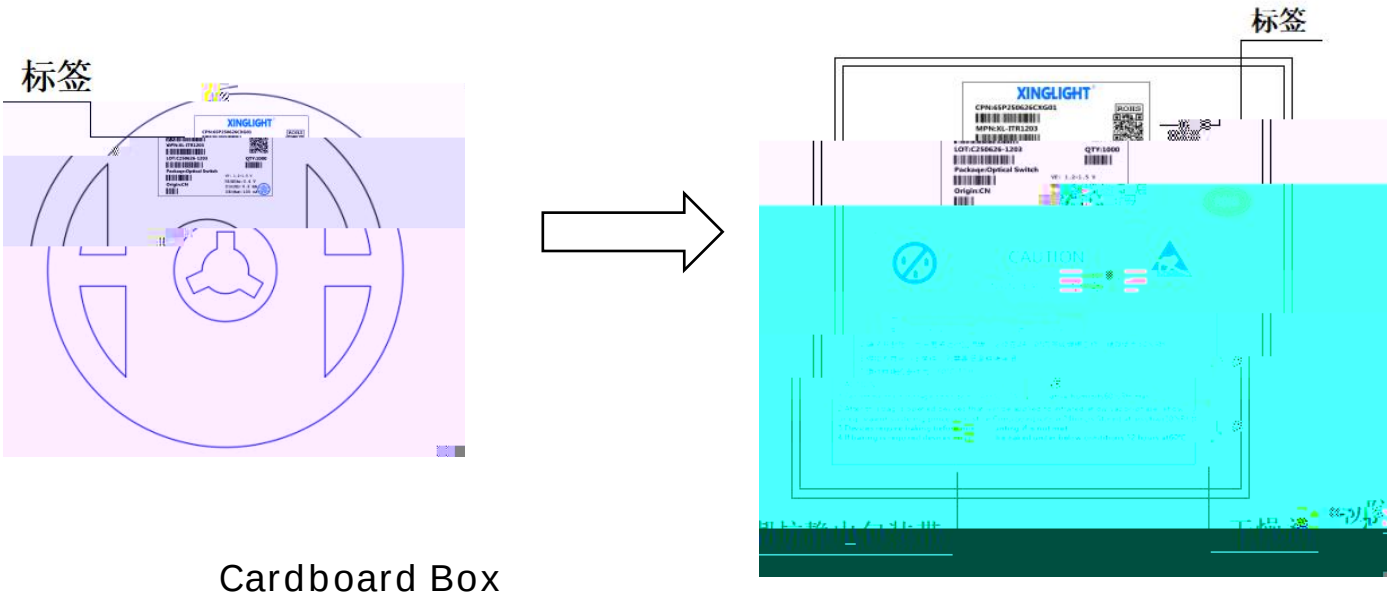

Cardboard Box

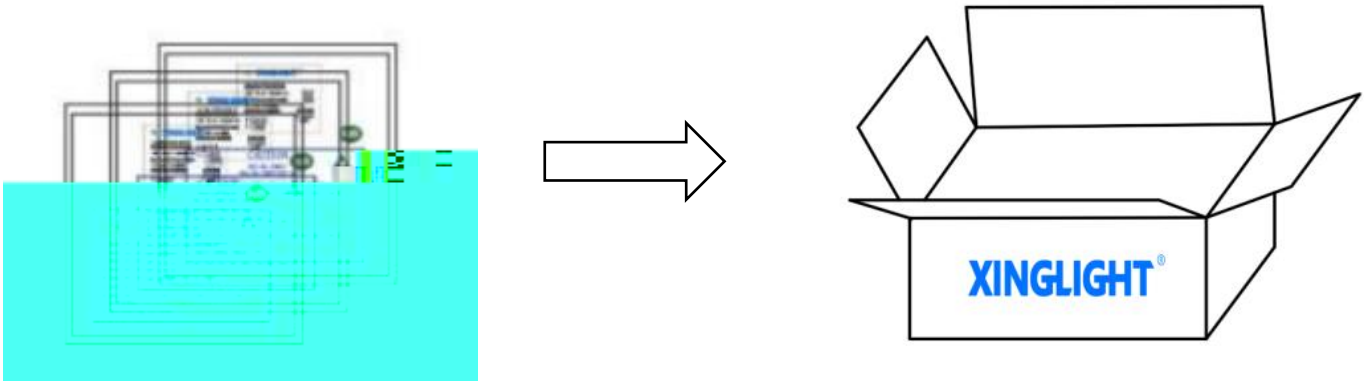

Label Expantion

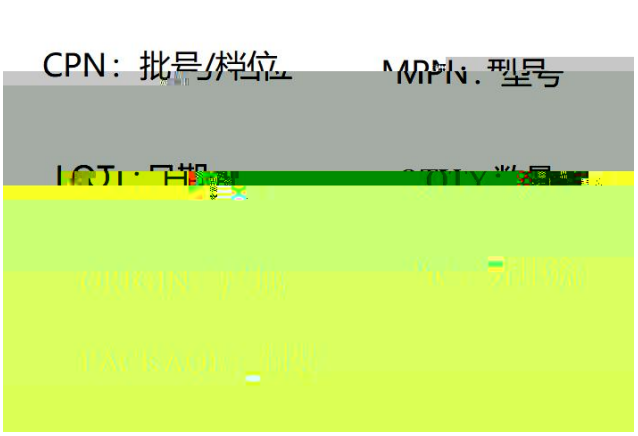

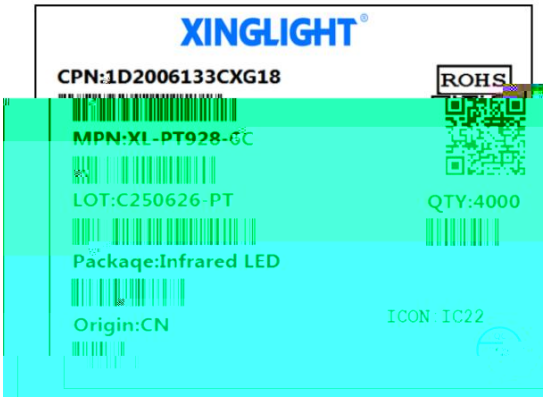

使用注意事项（2）

1. 贮存

.

Moisture proof and anti-electrostatic package with moisture absorbent material is used, to keep moisture to a minimum.

. 30 60%RH

Before opening the package, the product should be kept at 30 or less and humidity less than 60% RH, and be used within a year.

. 30 60%RH 168 7

; 30 40%RH

After opening the package, the product should be stored at 30 or less and humidity less than 40%RH, and be soldered within 168 hours (7 day). And it should be welded as soon as possible after the patch.It is recommended that the product be operated at the workshop condition of 30 or less and humidity less than 40%RH.

. LED

60 ± 5 24

If the moisture absorbent material has fade away or the LEDs have exceeded the storage time, baking treatment should be performed based on the following condition: (60 ± 5) for 24 hours.

静电

LED 1 100V

Static electricity or surge voltage damages the LEDs. Damaged LEDs will show some unusual characteristic such as the forward voltage becomes lower, or the LEDs do not light at the low current. even not light.

All devices, equipment and machinery must be properly grounded. At the same time, it is recommended that wrist bands or anti-electrostatic gloves, anti-electrostatic containers be used when dealing with the LEDs.Using ordinary plastic products are strictly prohibited.It is recommended to use ion fans to suppress the static electricity generation during the operation.The static field voltage is less than 100V within the ambient range of 1 foot distance from the LED element.

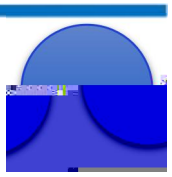

Part