特点（Characteristics）

* H :1.5*1.6*1.5 mm

Outline Dime (L / w / h): 1.5*1.6*1.5 mm

* /

Luminous colo colloid: high brightness Colorful/black matte packaging

* MSL : 3

Moisture sensi evel MSL : 3 levels

* HS

Environmental ction products Complied With RoHS Directive

* EIA

EIA standard packag

* SMT

Suitable for SMT automatic production

*

Suitable for infrared reflow soldering process

应用领域（Product application）：

亮度分档:
Brightness grading:

代码 Code	最小值 Min	最大值 Max	单位 Unit	测试条件 Test conditions
D3	120	150		
D4	150	180		
D5	180	210		
D6	210	240		
D7	240			
			mcd	IF=20mA

波长分档:
Wavelength grading:

代码 Code	最小值 Min	最大值 Max	单位 Unit	测试条件 Test conditions
HR02	620	625	nm	IF=20mA
HR03	625	630		
HB05	465	470		
HB06	470	475		
HG03	520	525		
HG04	525	530		

可靠性试验

Reliability Test Items And Conditions

Class	Test item	Testing environment	Testing time	Reference standard
Endurance test	Working life	20mA Continuous lighting at the maximum rated current at room	1000 1000 hours -24 +72) -24hours +72hours	MIL-STD-750D:1026 MIL-STD-883D:1005 JIS C 7021:B-1
	High temperature and high humidity storage	IR-Reflow In-Board, 2 Times Ta= 85±5 , RH= 90 95%	240 240hours ± 2) ± 2hours)	MIL-STD-202F:103B JIS C 7021:B-11
	High-temperature storage	Ta= 85±5	1000 1000 hours -24 +72) -24hours+72hours	MIL-STD-883D:1008 JIS C 7021:B-10
	Low temperature	Ta= -40±5		JIS C 7021:B-12
	Cold and hot cycle	105 25 -55 25 30mins 5mins 30mins 5mins	50 50 Circles	MIL-STD-202F:107D MIL-STD-750D:1051 MIL-STD-883D:1010
	Hot and cold impact	IR-Reflow In-Board, 2 Times 300± 5 -40 ± 5		
Environmental testing				

外形尺寸

Outline Dimension

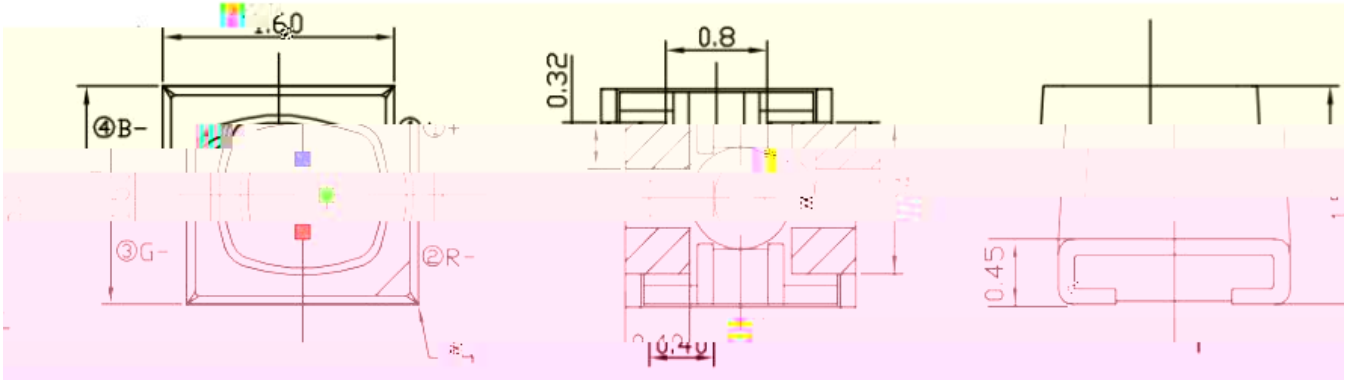

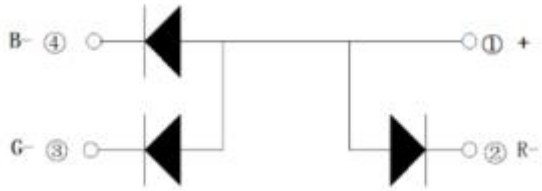

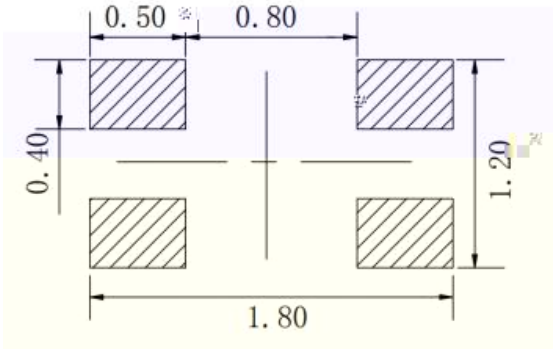

建议焊盘尺寸：
Recommended Soldering Pattern

1. mm
Remarks: All dimensions are in millimeters.

2. ±0.25mm
Tolerance is ±0.25mm unless otherwise noted

包装（1）

Packaging (1)

载带与圆盘尺寸 Belt and disk dimensions

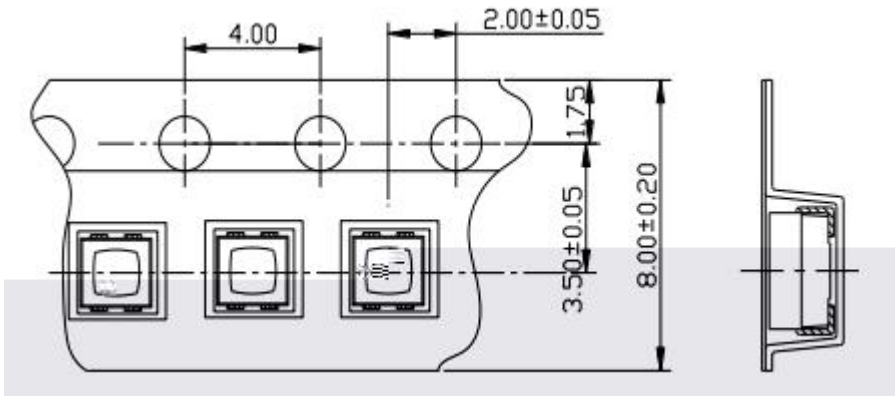

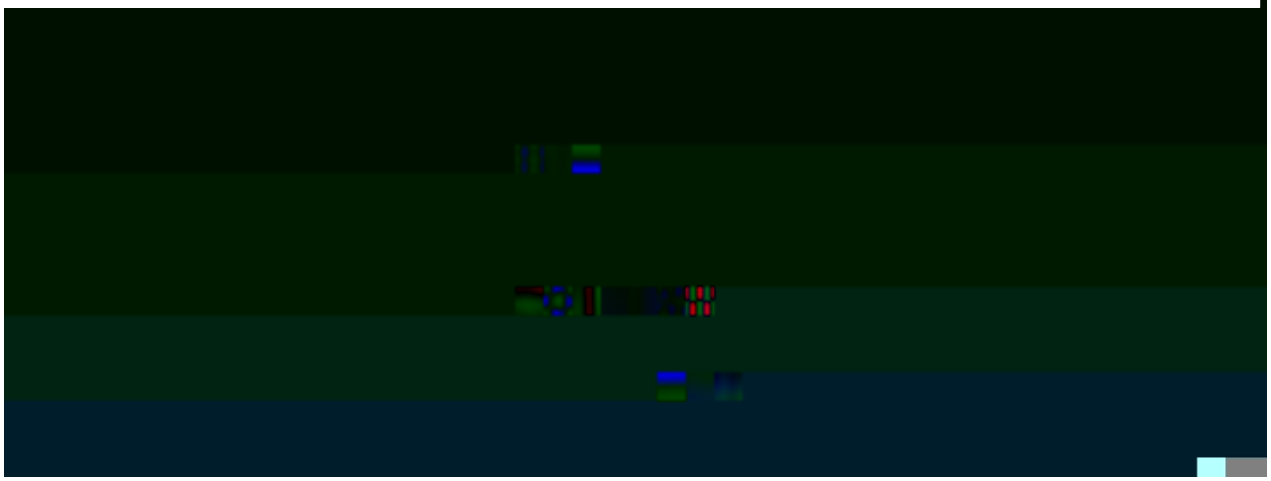

:

1. (mm)

1. Size unit is mm (mm).

2. ±0.1mm

2. The dimensional tolerance is ± 0.1mm.

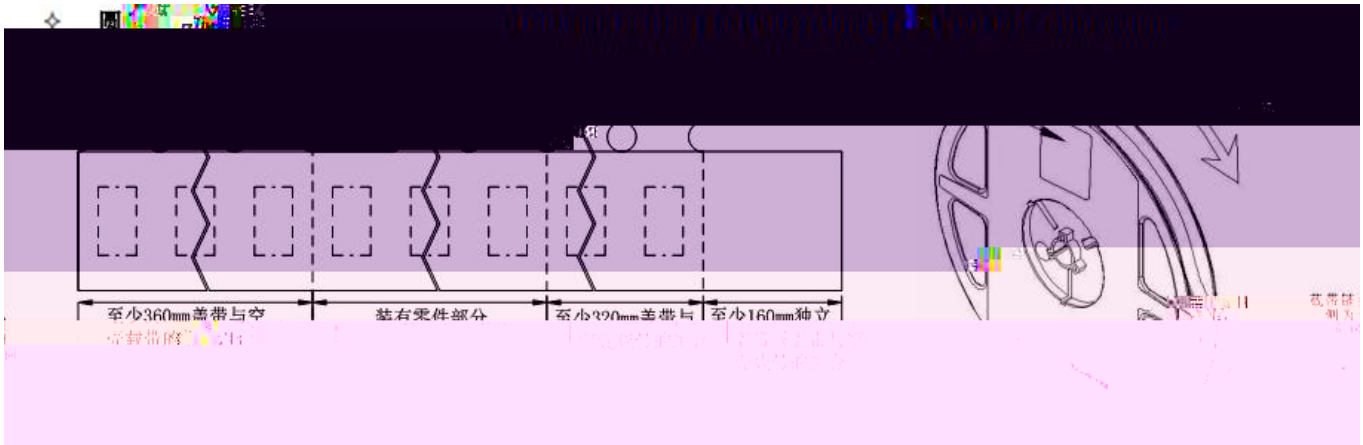

Part

使用注意事项（2）

Precautions (2)

3. [redacted]

Design Consider[redacted]n

LED

A LED

LED LED Ŋ كج

In designing a circuit, the current through each LED must not exceed the absolute maximum rating specified for each LED. In the meanwhile, resistors for protection should be applied, otherwise slight voltage shift will cause big current change, burn out may happen.

It is recommended to use Circuit A which regulates the current flowing through each LED rather than Circuit B. When driving LEDs with a constant voltage in Circuit B, the current through the LEDs may vary due to the variation in Forward Voltage (V_F) of the LEDs. In the worst case, some LED may be subjected to stresses in excess of the Absolute Maximum

XINGLIGHT®