目录

Catalogue

电性参数

典型特性曲线

可靠性实验

外形尺寸

包装

使用注意事项

Supply Voltage	VDD	6.0	V
Operating ambient temperature	Topr	-20 C ~ +85 C	
Storage ambient temperature	Tstg	-40 C ~ +125 C	
Welding conditions	Tsol	Wave soldering 240℃ 6s manual welding 300℃ 3s	

Working current	ICC	0.3	0.4	0.5	mA	VDD=5V
receive distance	L 0 °	6	8	-	M	/
	L 35 °	5	6	-	M	
	L 35 °	5	6	-	M	
Carrier Frequency	f_o	-	37.9	-	KHZ	/
BPF BPF width	f_{BW}	-	6	-	KHZ	/
Low level output	V_{ol}	-	-	250	mV	Isink=2.0mA
High level output	V_{oh}	4.5	-	5.0	V	VCC=5V
Pulse width	T_{pwl}	400	600	800	us	burst wave Vin=500UVp-p
	T_{PWH}	400	640	800	us	burst wave Vin=50mVp-p
Minimum pulse width	Tburst	350	-	-	us	Vin=50mVp-p
Minimum interval	Tburst gap	450	-	-	us	Vin=50mVp-p
Encoding pause time	T					

Recommended usage conditions

Supply Voltage	VDD	2.7	-	5.5	V
input frequency	FM	-	37.9	-	KHZ
Operating temperature	Topr	-	25	-	° C

Application circuit diagram

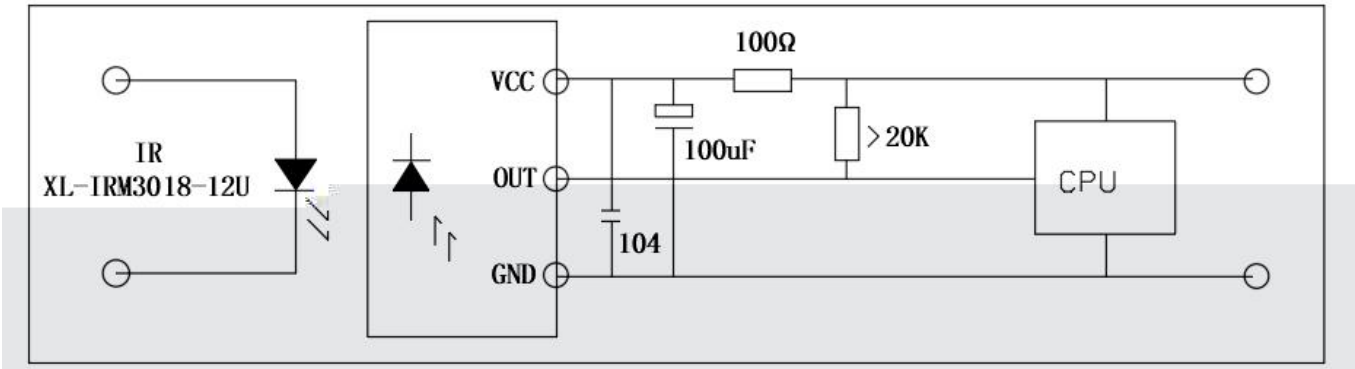

schematic diagram

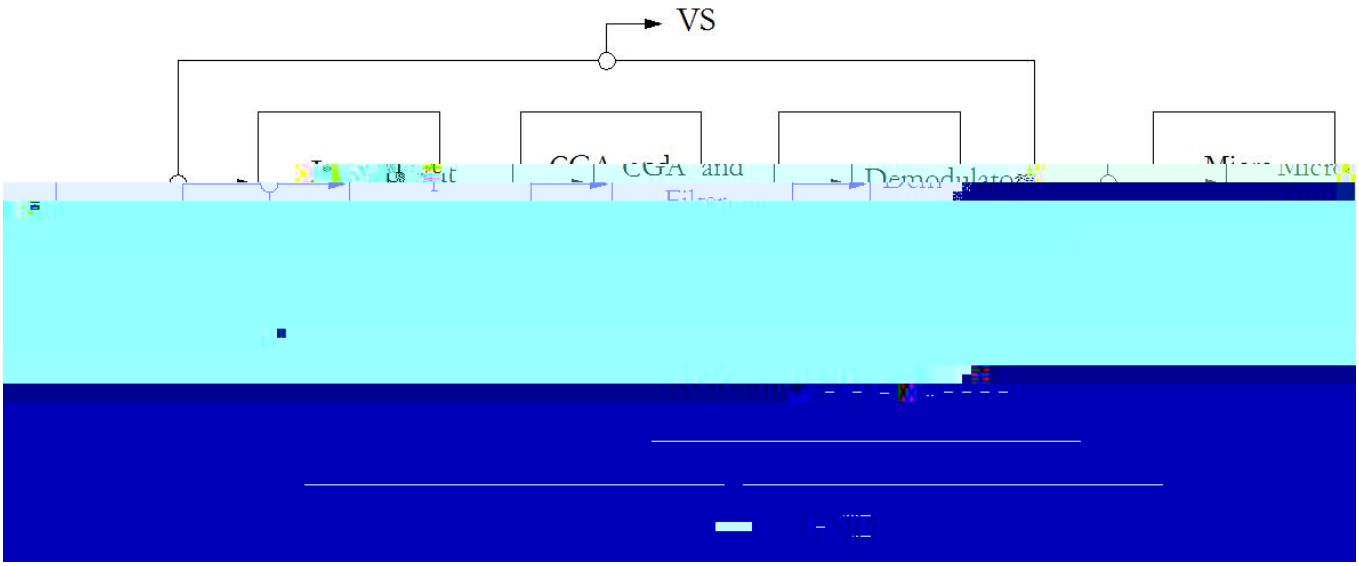

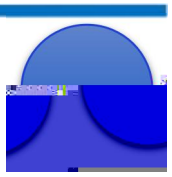

接收距离分档

典型特性曲线

Test waveform

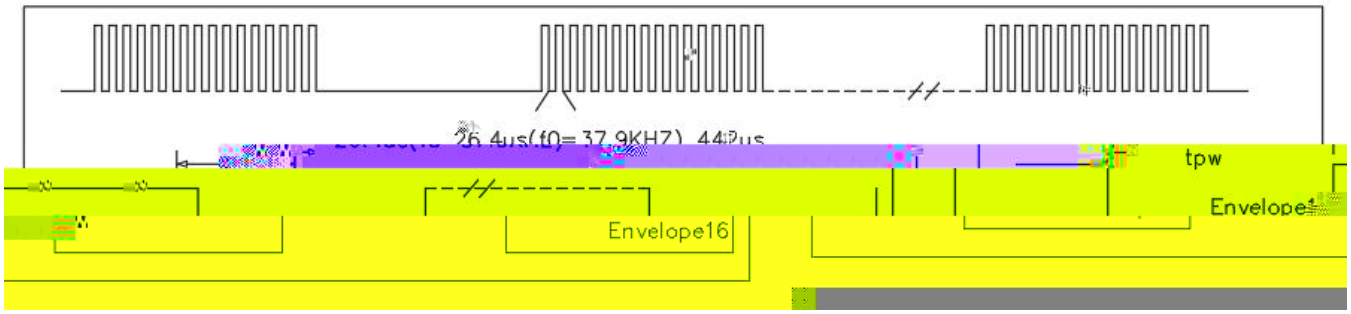

Figure 4. Typical Bandpass Curve

Figure 4. Supply Current VS supply Voltage

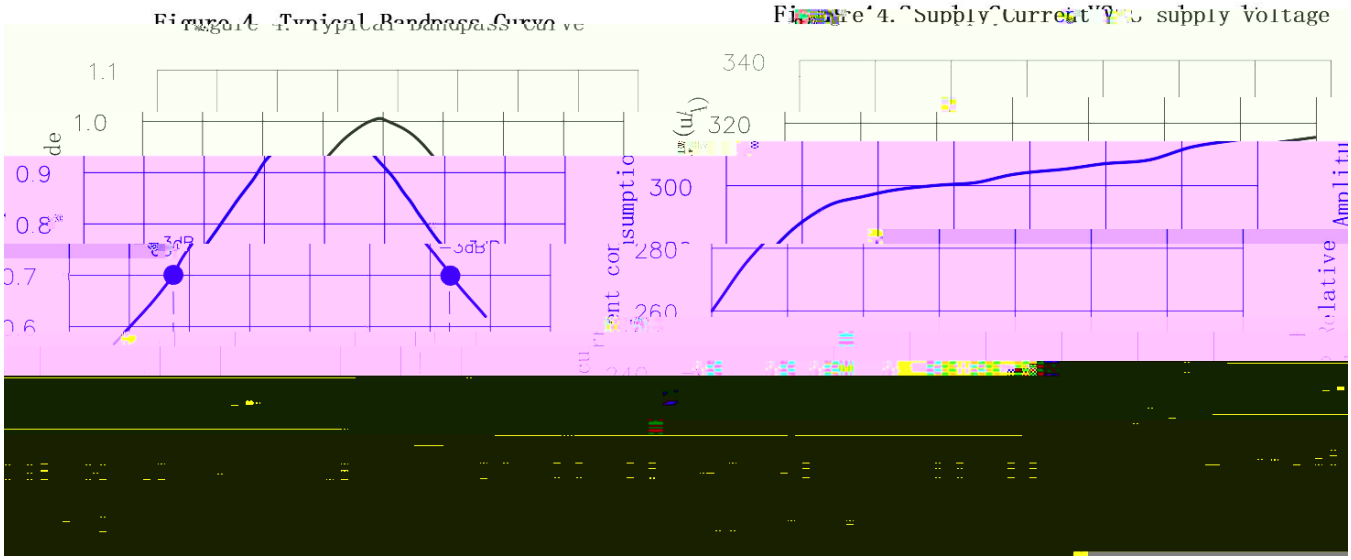

可靠性试验

Reliability Test Items And Conditions

*

	260 ±5	5	20	20
	100PF 1.5KΩ, 4KV,	-	20	20

外形尺寸

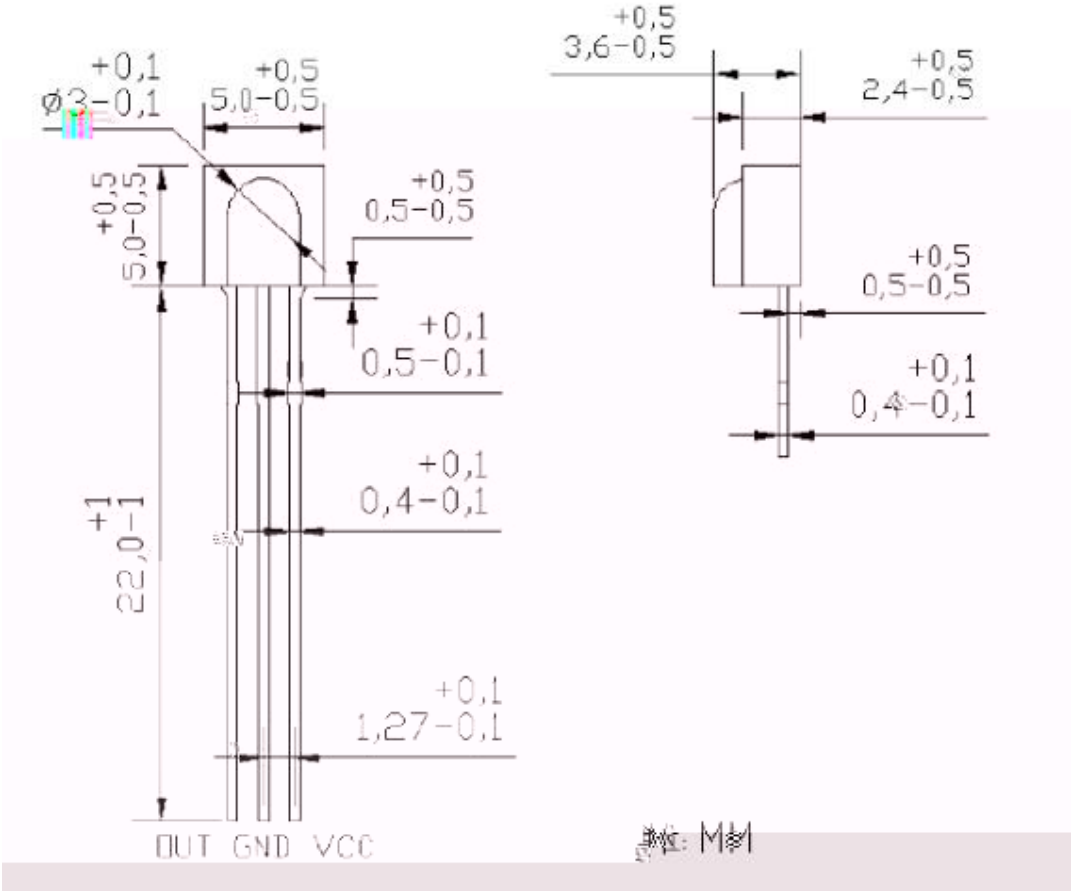

(Note)

1.

Dimensions are in millimeters.

2. ± 0.25mm .

Tolerances unless mentioned are ± 0.25mm.

包装

*
In Bags

*
Moisture Proof and Anti-Electrostatic Foil Bag

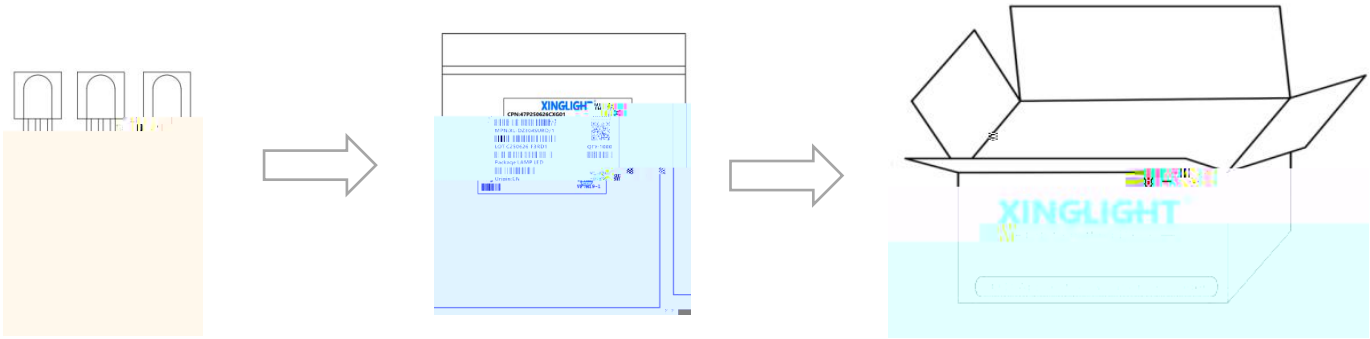

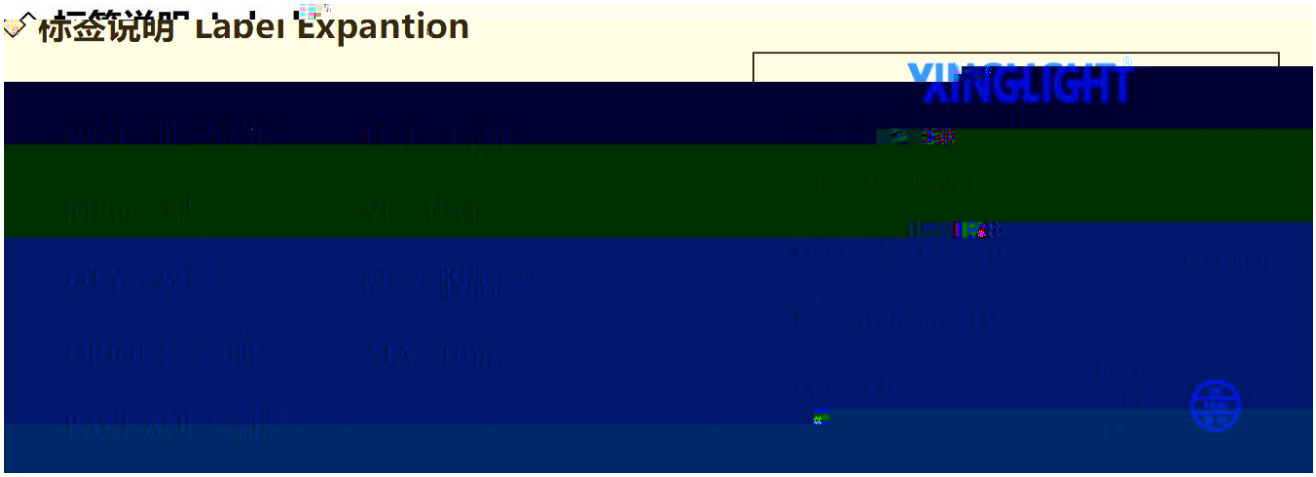

使用注意事项（ ）

1

LED

This Infrared receiver head can be used in some ordinary electronic equipment, such as office equipment, communication equipment, house decoration, if LED is used in some high reliability requirements, such as air transportation, traffic control and medical liao equipment, must refer to the information provided by sales.

2

85 70%

Storage environment of Infrared receiver head with temperature not exceeding 30 and relative humidity not exceeding 70%.It is recommended that Infrared receiver head be used in the original box for no more than three months. If longer storage time is required, put it in the drying box and add desiccant or filled with nitrogen.

3

Special care must be taken when cleaning colloids with chemicals, as some chemicals have damage to the colloidal surface and cause fading such as trichloroethylene, propylene, ketone, etc.It can be wiped and soaked with ethanol for no more than 3 minutes at room temperature.

1 2

It must be 2 mm from the colloid to bend the bracket.

2

Support forming must be done with fixtures or by a professional.

3

Support forming must be completed before welding.

4

The pins and spacing are the same as on the circuit board.

5 LED PCB

Welding must be performed at normal temperature and when Infrared receiver head is normally welded to the PCB plate, avoid applying mechanical pressure at LED pins at a minimum.

使用注意事项（ ）

2mm

When welding, welding must be conducted below 2mm of colloid bottom. When welding, try to avoid soaking Infrared receiver head colloid. After welding, avoid adding external force on the pin or shaking Infrared receiver head colloid.

InGaN

HBM<1000V <100V

High increase of static electricity and current will damage Infrared receiver head. Use antistatic devices such as protective belts and gloves. Note: human discharge mode HBM <1000V; machine discharge mode <100V.

Sensitivity:The same product can be used on different devices,The actual data meas

使用注意事项（ ）

9、其他事项：

Do not apply unnecessary external force to the pins of the infrared receiver head Pay attention to protecting the receiving surface of the infrared receiver head Staining can affect reception function

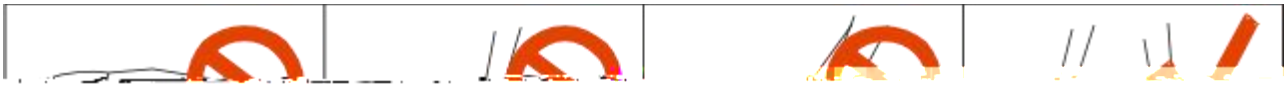

If there are any modifications to the specification sheet, no further notice will be given