ج ṗ Ƨ PINϣ̈ غ ٧ w ╠
IC, ٦ تم قمم ĭ ṗ ĭ
ج REACH غ ROHS Ḡ ج ضي
ƀ كح ą

This product contains a high-speed and high sensitivity pin photo diode and Low power consumption, high gain Preamplifier Ic Adopting epoxy resin plastic encapsulated semi circular spherical packaging Dual shielding and anti-interfere

목록

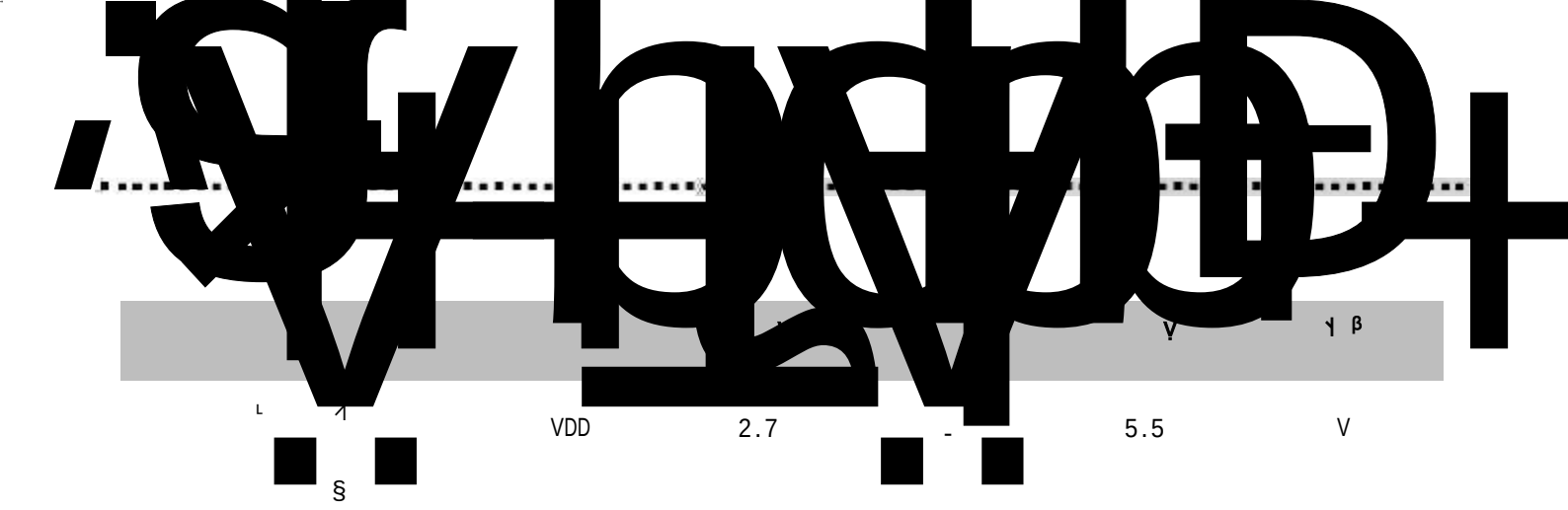

					V	β
L		VDD	2.7	-	5.5	V
	§					

Minimum Burst Length tburst (number of pulses per burst) ǖ tburst ǖ ǁ	10 pulses
Minimum Burst Gap time tburst_gap (number of pulses per burst) between two burst ǖ ǖ tburst_Gap ǖ ǁ	12 pulses
Minimum data pause time (for full frame repeat code) Ả ŋ ๆ	25 msec

ˆ ๆ ↓

Toshiba	o	Sony 20 bit	o
NEC	o	Matsushita	-
RC5/6 Philips	o	Mitsubishi	-
RCA Thompson	-	Zenith	-
Sharp	-	JVC	-
Sony 12bit	-	Continuous code	-
Sony 20bit	-	-	-

1. ج ɳ
2. ǖ Ḥ كح ضي 20Cm ɣ ą ǖ Ḥ كح ↕ˆ

Ð

Test conditions

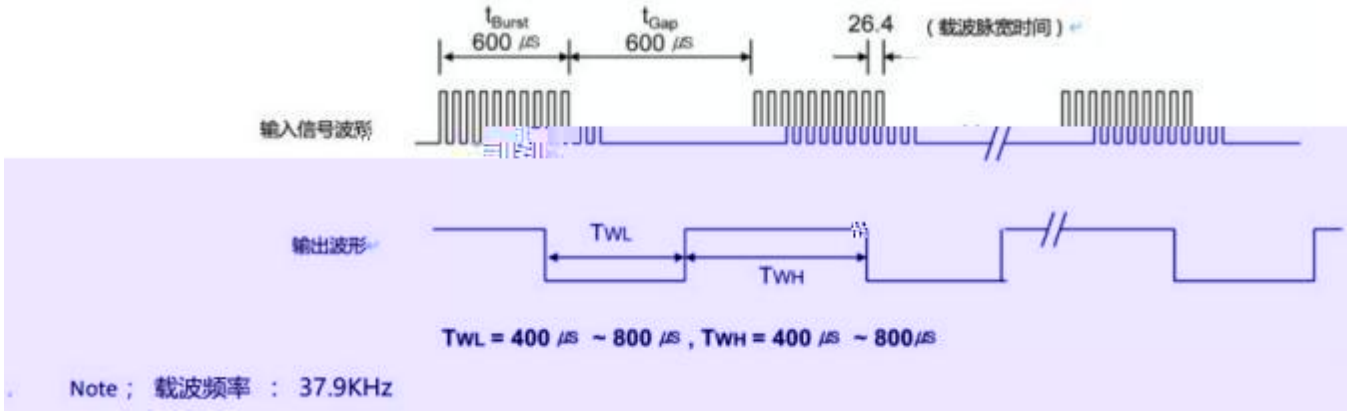

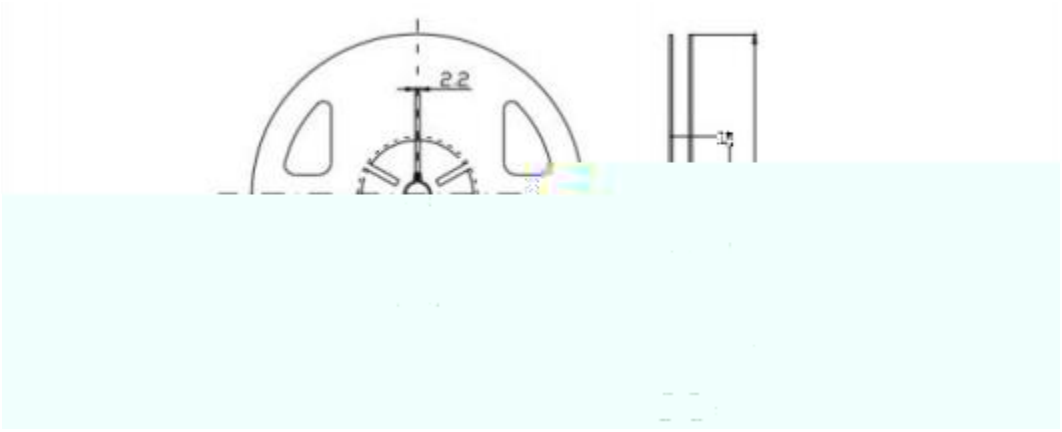
22

◇ 防潮抗静电包装Moisture Proof and Antti-Electrostatic Foil Bag

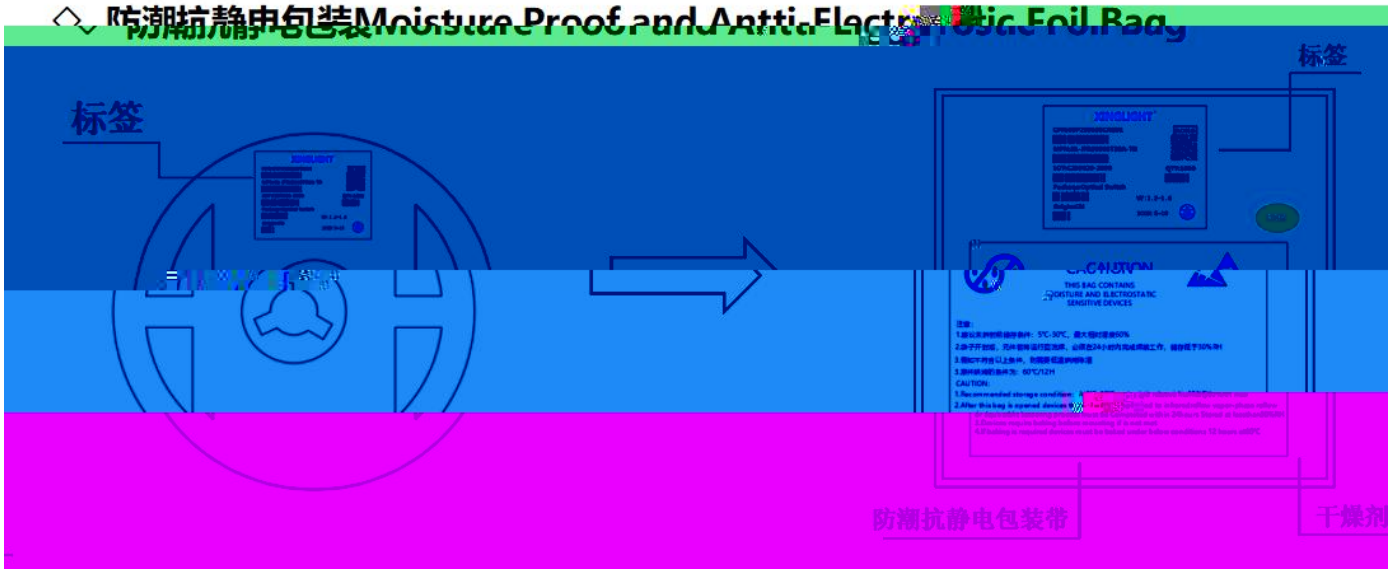

◇ 外包装箱 Cardboard Box

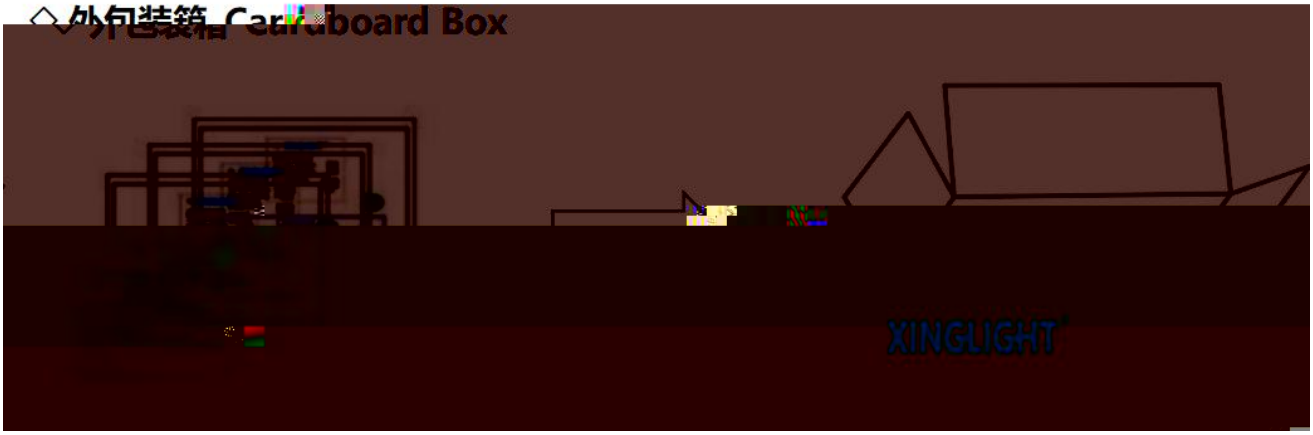

◇ 标签说明 Label Expantion

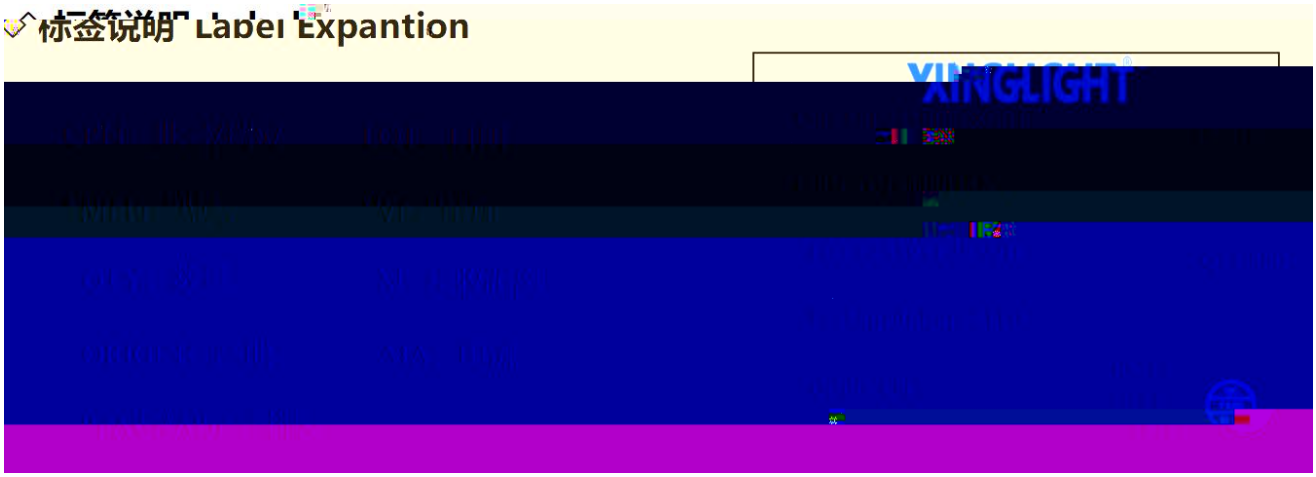

1

· ج ą ´ ㅋ ج Ḡ

· ╠ ج ضي ,

3

Precautions (3)